PARTS LIST NO. 581494703		WEED EATER® PARTS LIST	MODEL(s) W25CFK
DATE 4/05/13	Replaces: 581494703 11/07/12	**Note:** Illustration may differ from actual model due to design changes	PAGE NO. 1

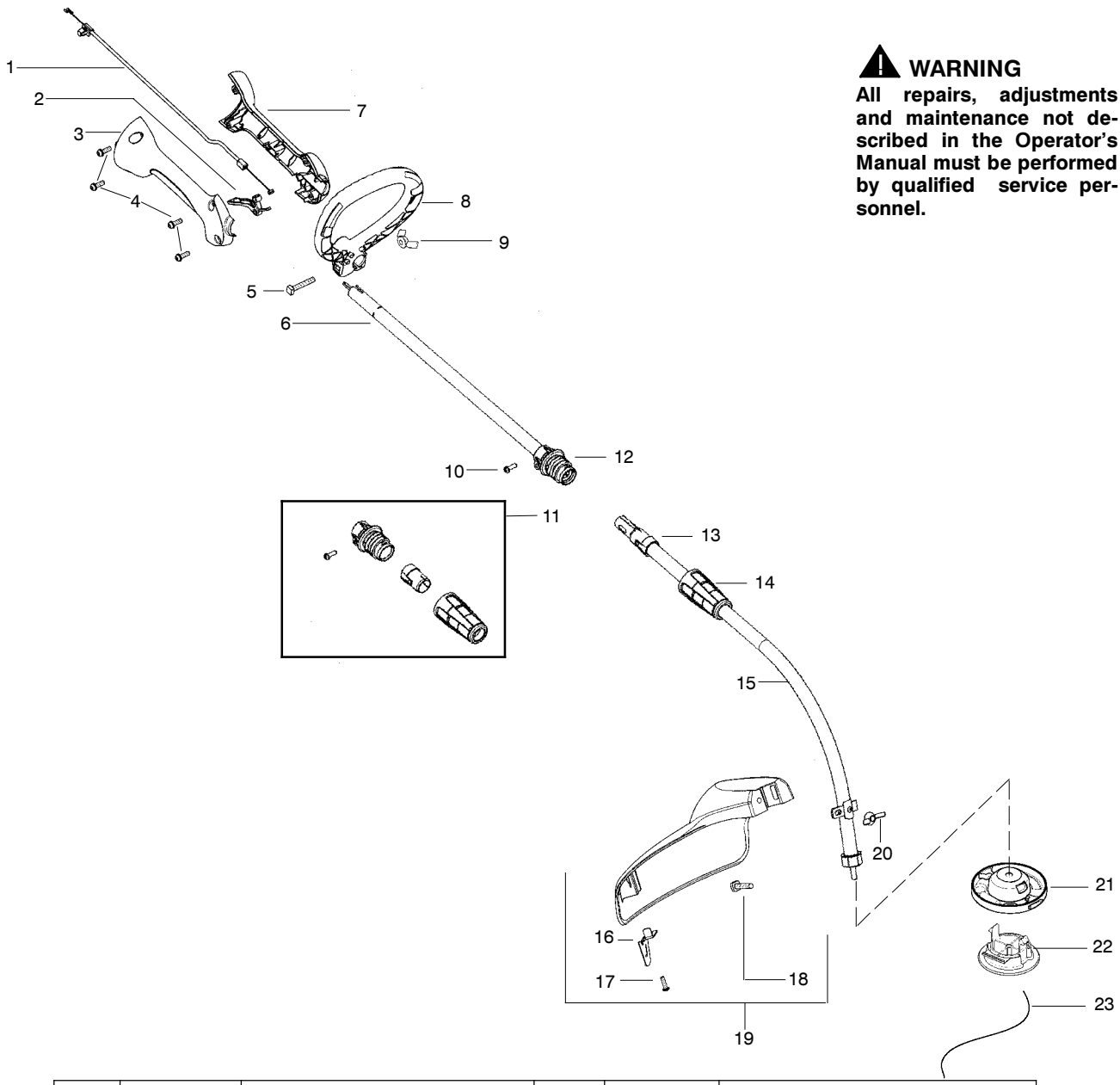

⚠ WARNING

All repairs, adjustments and maintenance not described in the Operator's Manual must be performed by qualified service personnel.

Ref.	Part No.	Description	Ref.	Part No.	Description
1.	530057991	Assy–Throttle Cable	16.	530052286	Line Limiter
2.	530058000	Trigger	17.	530016349	Screw–Line Limiter
3.	530057582	Throttle Hsg. (Right)	18.	530015820	Bolt
4.	530015880	Screw–Throttle Hsg.	19.	581494801	Kit–Shield Assy (Incl. 16,17,18,20)
5.	530015821	Bolt	20.	530016152	Wingnut
6.	545008059	Kit–Upper Shaft (Incl. 10,12)	21.	545202402	Head–Fixed Line
7.	530057581	Throttle Hsg. (Left)	22.	545202501	Cap–Fixed line
8.	530058580	Assy–Handle (Incl. 5,9)	23.	581681001	Accy.–Line .095 round (12 pcs)
9.	530016152	Wingnut			
10.	530015880	Screw (10–14 x 5/8)			
11.	581535001	Kit–Coupler Shaft (Incl. 10,12,13,14)		Not Shown	
12.	----	Collet (ref. 11)		115495027	Operator Manual
13.	----	Collar–Shaft (ref. 11)		581092301	Decal–Shaft Warning
14.	----	Nut–Collet (ref. 11)			
15.	581494904	Kit–Lower Shaft (Incl. 13,14)			

✓ = NEW PART NUMBER FOR THIS IPL ★ = REFER TO THE SERVICE REFERENCE INDICATED FOR MORE INFORMATION. (LOCATED AT END OF IPL)

PARTS LIST NO. 581494703		WEED EATER® PARTS LIST	MODEL(s) W25CFK
DATE 4/05/13	Replaces: 581494703 11/07/12	**Note:** Illustration may differ from actual model due to design changes	PAGE NO. 2

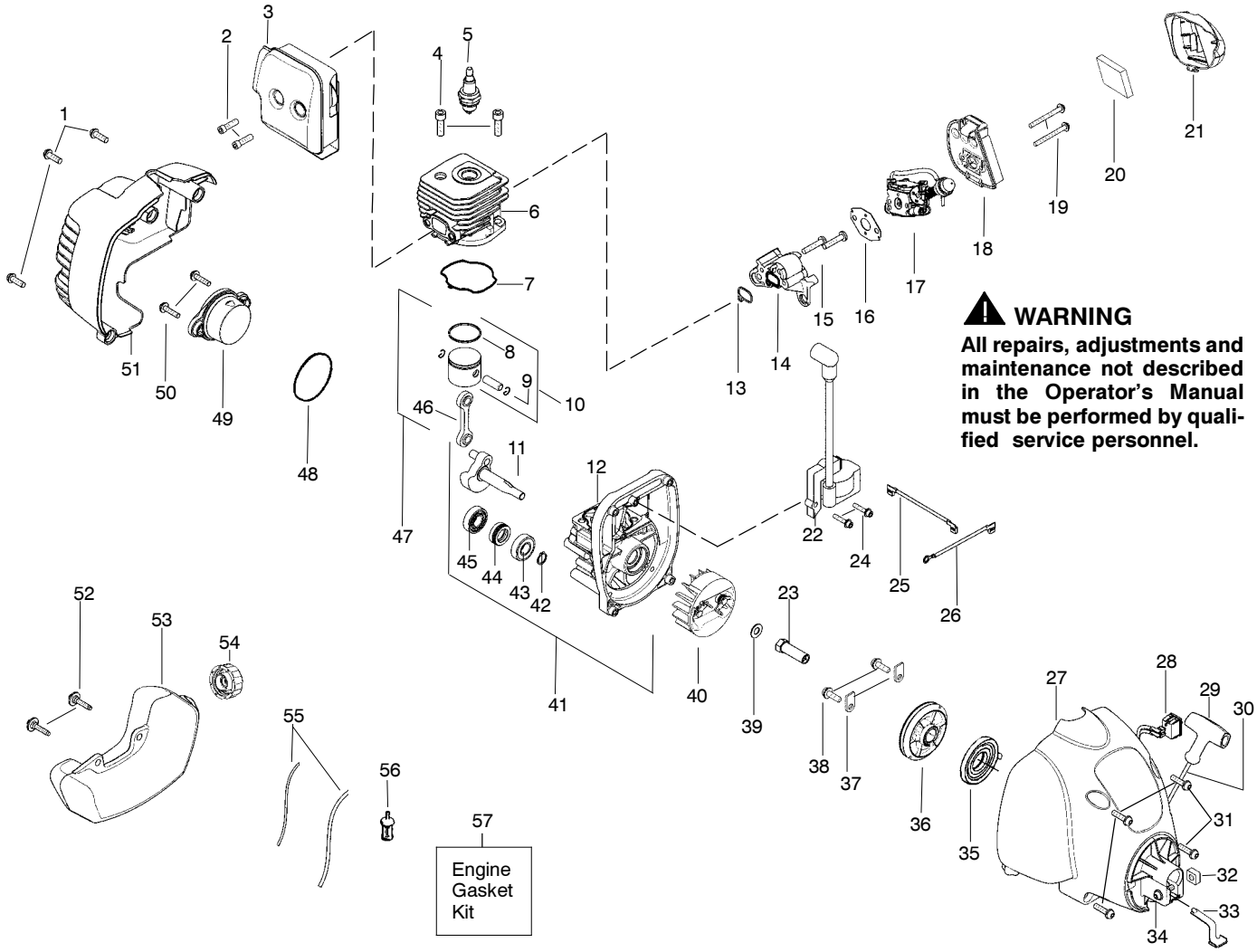

⚠ WARNING

All repairs, adjustments and maintenance not described in the Operator's Manual must be performed by qualified service personnel.

Ref.	Part No.	Description	Ref.	Part No.	Description	Ref.	Part No.	Description
1.	530015814	Screw	24.	545003903	Screw	49.	530057954	Assy–Plug (incl.48)
2.	530058982	Bolt–Muffler	25.	530014663	Assy–Leadwire	50.	530016386	Screw
3.	545227901	Assy–Muffler/Shield (Incl. 2)	26.	581425901	Assy–Ground Wire	51.	545011004	Shroud–Rear (black)
4.	530015953	Screw–Cylinder	27.	580410802	Assy.–Fan Hsg	52.	530016445	Retainer–Tank
5.	503235111	Spark Plug – BPMR7A	28.	545081869	Kit–Switch	53.	581263701	Assy–Fuel Tank (incl. filter, lines & fuel cap)
6.	530012541	Cylinder	29.	530027569	Handle–Starter	54.	579746601	Assy–Fuel Cap
7.	–––	Seal (Ref.#57)	30.	530071798	Kit – Rope	55.	–––	Kit–Fuel Line (Ref#53)
8.	545154001	Piston Ring	31.	530016386	Screw	56.	530095646	Assy–Fuel Pickup
9.	530015162	Retainer–Piston Pin	32.	530016124	Nut	57.	530071750	Kit–Engine Gasket (Incl. 7,13,16,48)
10.	530071357	Kit – Piston (Incl. 8, 9)	33.	530057588	Clip–Spring			
11.	530057829	Assy–Crankshaft	34.	530016430	Screw			
12.	530012582	Assy–Crankcase (Incl. 43,44,45)	35.	545054901	Spring–Starter			
13.	–––	Seal (Ref.#57)	36.	545050407	Kit–Pulley–Starter			
14.	530057547	Adapter–Carb.	37.	530027523	Retainer–Pulley			
15.	530016441	Screw	38.	530016224	Screw			
16.	–––	Gasket (Ref.#57)	39.	530015828	Washer–Flat			
17.	577135902	Kit–Carb.	40.	530054115	Assy–Flywheel			
(Note: Repair kits are not available for this carburetor)			41.	530071768	Assy–C'case & C'shaft (Incl. 11,12,42)			
			42.	530015941	Retain. Ring–C'shaft			
			43.	530055728	Outer Bearing			
18.	530057585	Air Box	44.	530019264	Seal–C'case		Not Shown	
19.	✓ 530016428	Screw	45.	530032125	Inner Bearing			
20.	530057781	Foam–Air Filter	46.	530069945	Assy–Connecting Rod		581479401	Bulb–Purge(w/shaft)
21.	576694401	Cover–Air Box	47.	530071785	Kit–Piston/Rod Assy (Incl. 10 & 46)			
22.	578287001	Ignition Module						
23.	530038604	Coupling–Drive	48.	–––	O–Ring (Ref.#49,57)			

✓ = NEW PART NUMBER FOR THIS IPL ★ = REFER TO THE SERVICE REFERENCE INDICATED FOR MORE INFORMATION. (LOCATED AT END OF IPL)